DIAGRAM OF BEX S80/16-B1

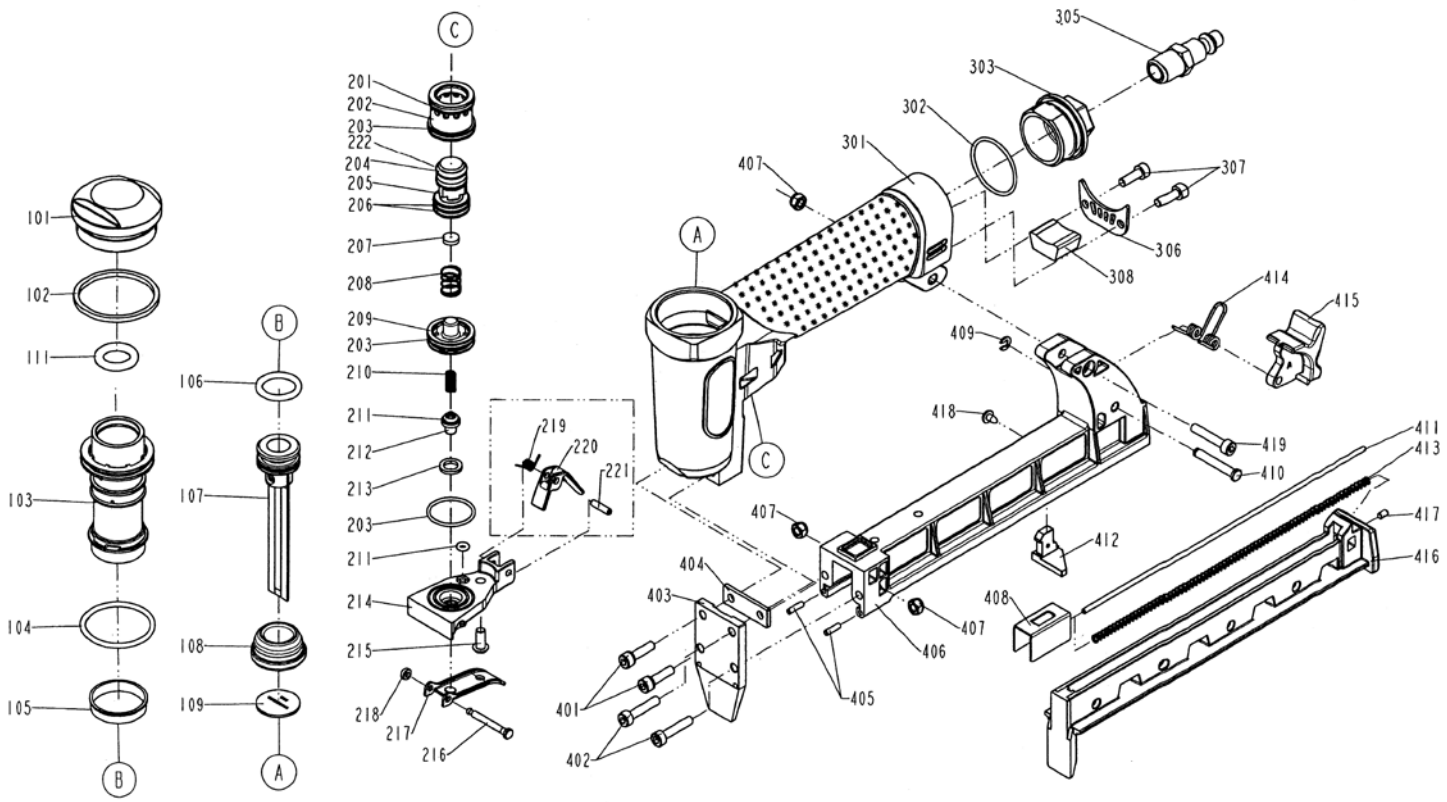

ITEM NO.	PART NO.	DESCRIPTION	ITEM NO.	PART NO.	DESCRIPTION	ITEM NO.	PART NO.	DESCRIPTION
101	11371-0030001-1	DEFLECTOR	302	2041109-03040-0	O - RING			
102	2020550047	PACKING	303	11346-0034303-1	END CAP			
103	11320-0730001-1	CYLINDER	305	1135V-0000039-1	AIR PLUG			
104	3203300000	O - RING	306	11394-0034702-1	GUIDE PLATE			
105	2020240047	CYLINDER RING	307	20110412C12	HEX.SOC.HD.BOLT			
106	2041106-02010-0	O - RING	308	1132T-0030002-1	MUFFLER			
107	11204-0040019-2	DRIVER UNIT	401	2040100-02080-2	BOLT ASSY			
108	11327-0734701-2	BUMPER	402	20110420C12	HEX.SOC.HD.BOLT			
109	2021630A00	DRIVER GUIDE	403	11351-0044704-1	DRIVER GUIDE COVER			
111	2041107-02010-0	O-RING	404	11380-0044702-1	GASKET			
201	2041104-02080-0	O - RING	405	11325-0030001-1	PIN			
202	11373-0030002-1	TRIGGER VALVE HEAD	406	11391-0044703-2	MAGAZINE B			
203	2041109-03030-0	O - RING	407	2501042	LOCK NUT			
204	2041109-02080-0	O - RING	408	11363-0044703-1	PUSHER			
205	1133S-0030002-2	VALVE PLUNGER	409	226106	E - RING			
206	2041109-02120-0	O - RING	410	11344-0394705-1	LATCH PIN			
207	1130J-0030001-1	CUSHION	411	11395-0034701-1	ROD			
208	2020730A00	SPRING	412	11305-0030001-1	STOPPER			
209	11374-0030002-1	PLUNGER CAP	413	11367-0034701-1	PUSHER SPRING			
210	100122001	SPRING	414	2020770A00	SPRING			
211	3200250000	O - RING	415	11343-0394704-1	LATCH			
212	2020340A00	PLUNGER	416	11389-0044704-1	MAGAZINE A			
213	2020740030	COLLAR	417	2040104-01010-0	HEX.SOC.HD.SCREW			
214	1133T-0030001-2	PLUNGER CAP	418	2040107-01040-0	TAP BOLT			
215	20310410C12	HALF ROUND HD.HEX.BOLT	419	20110422C12	HEX.SOC.HD.BOLT			
216	11318-0034702-1	TRIGGER PIVOT PIN						
217	11316-0034702-1	TRIGGER						
218	104620201	URETHANE RETAINER						
219	11315-0040001-1	SPRING						
220	1136S-0044701-2	SAFETY STOPPER						
221	246202	SPRING PIN						
222	2041106-01010-0	O - RING						
301	11230-0037101-1	GUN BODY UNIT						